S-5-NH 1.5

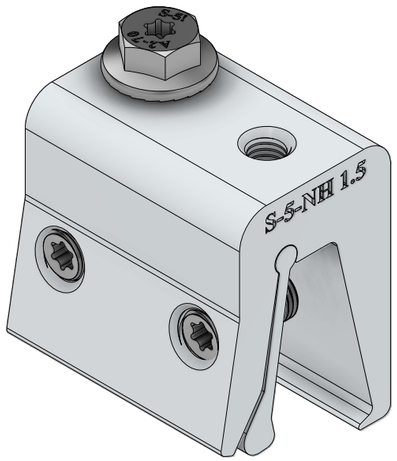

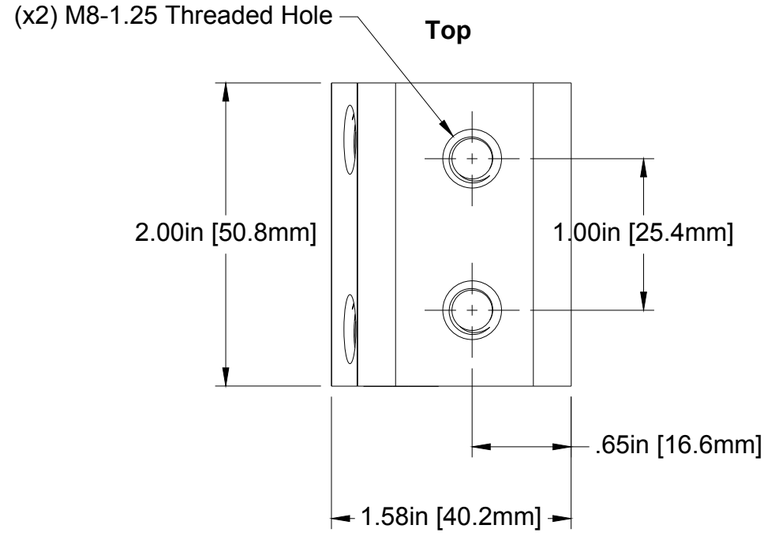

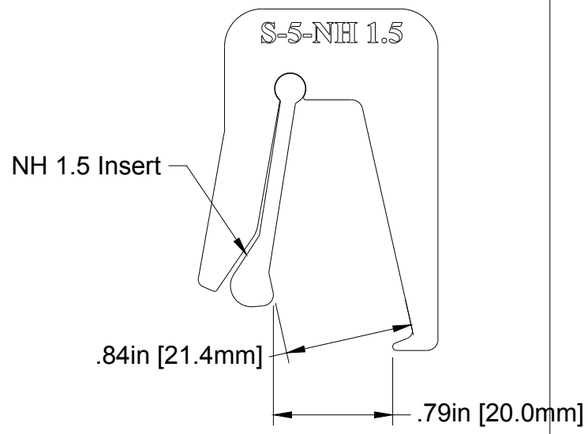

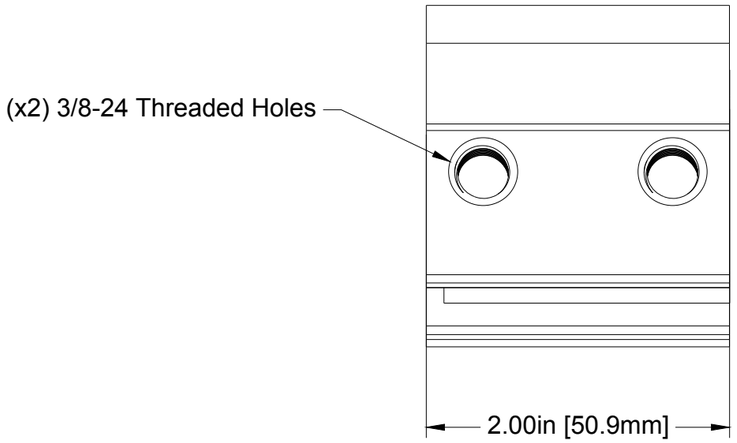

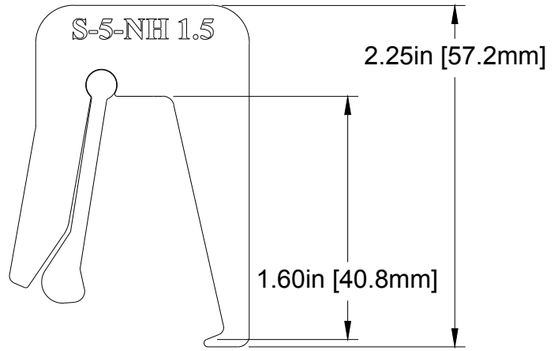

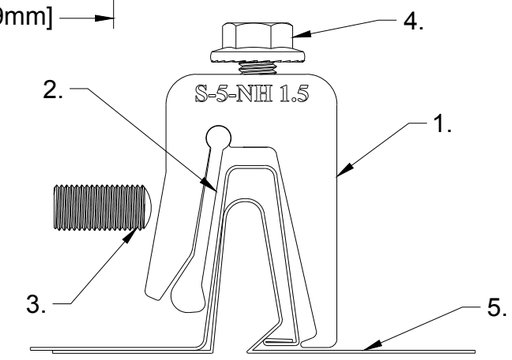

General Notes:

1. S-5-NH 1.5
2. S-5-NH Insert
3. 0.9 3/8-24 T30 Drive SetScrew
4. M8-1.25x17mm Bolt (13mm/T30 Drive)
5. Example roof

MATERIAL: 6000 Series AL	S-5!® METAL ROOF INNOVATIONS, LTD. 8750 WALKER RD COLORADO SPRINGS, CO 80908 719-495-0518 719-495-0045 (FAX)
EST ASSEMBLY WT: 1.084 lbs	
HARDWARE: (x2) 0.9" 3/8-24 T30 Drive Set Screw, M8-1.25 16 mm Bolt	TITLE S-5-NH 1.5 [CCD]
	DRAWING NO. NH150-A-0-C · DRAWN BY SNLR · DATE 3/9/2022
	SCALE 1:1 · FILE NAME NH150-A-0-C (S-5-NH 1.5) [CCD]
	S-5!® PRODUCTS ARE PROTECTED BY MULTIPLE U.S. AND FOREIGN PATENTS. VISIT OUR WEBSITE AT WWW.S-5.COM FOR COMPLETE INFORMATION ON PATENTS AND TRADEMARKS